OCCUPATIONAL EXPOSURE TO LEAD
CABLE REMOVAL

Compliments of www.bellsystemleadpoisoning.com

1. GENERAL 1

2. UNDERGROUND LEAD SHEATH CABLE REMOVAL 1

PURGING AND VENTILATING MANHOLES 1

REDUCING LEAD DUST IN MANHOLES . 1

REMOVAL RATE AND HANDLING . . . 12

3. AERIAL LEAD SHEATH CABLE REMOVAL . 12

4. WORK ASSIGNMENT RESTRICTIONS . . 12

5. PERSONAL HYGIENE AND WORK CLOTHING 12

1. GENERAL

1.01 This section covers procedures that must be followed by employees engaged in lead sheath cable removal operations. Lead sheath that has been in place for extended periods will, when disturbed, release lead particles in the form of dust that can become airborne. These airborne particles can enter the body through inhalation or ingestion and can have adverse effects on the health of the person who is exposed for prolonged periods.

1.02 When this section is reissued, the reason for reissue will be listed in this paragraph.

1.03 Handling new lead sheath cable does not present health hazards related to airborne particles. However, gloves should be worn when placing new cable and should be removed before drinking and the hands washed before eating or using tobacco products.

2. UNDERGROUND LEAD SHEATH CABLE REMOVAL

PURGING AND VENTILATING MANHOLES

2.01 The procedures in Section 620-140-501 for purging and ventilating manholes must be strictly adhered to. In addition to removing toxic or combustible gases and providing fresh air, proper purging and ventilating will remove any concentration of lead dust that may accumulate in the manhole atmosphere.

2.02 Proper blower hose placement is especially important in dry manholes. Placing the end of the hose too close to the manhole floor could stir up dust particles that have accumulated on the manhole floor.

2.03 Since the blower hose is removed during the pull, the manhole must be repurged for ten minutes before anyone reenters after the pull has been completed. The repurging requirement is necessary to remove lead particles which have been scuffed off the cable during the removal operation. All employees should stand clear of the manhole opening during purging—at least 5 feet away and, if possible, upwind.

REDUCING LEAD DUST IN MANHOLES

2.04 Any time old lead cable is handled, lead dust is generated and introduced into the atmosphere. Excessive amounts of dust can be unnecessarily generated by allowing the cable to scrape against the manhole frame or the end of the duct as the cable is being removed. This can be prevented by proper alignment of the sheaves, pulling frame, etc, prior to starting the pull.

NOTICE
Not for use or disclosure outside the
Bell System except under written agreement

Printed in U.S.A.

2.05 If the manhole is equipped with a pulling-in iron, set up in the manhole with a cable sheave and shackle and quadrant block or manhole sheave as shown in Fig. 1. If pulling irons are not in the manhole, set up with a pulling frame (Fig. 2), or quadrant blocks or manhole sheaves as shown in Fig. 3. Do not set up in the manhole in such a way that the cable scrapes the manhole collar (Fig. 4) or the end of the duct (Fig. 5).

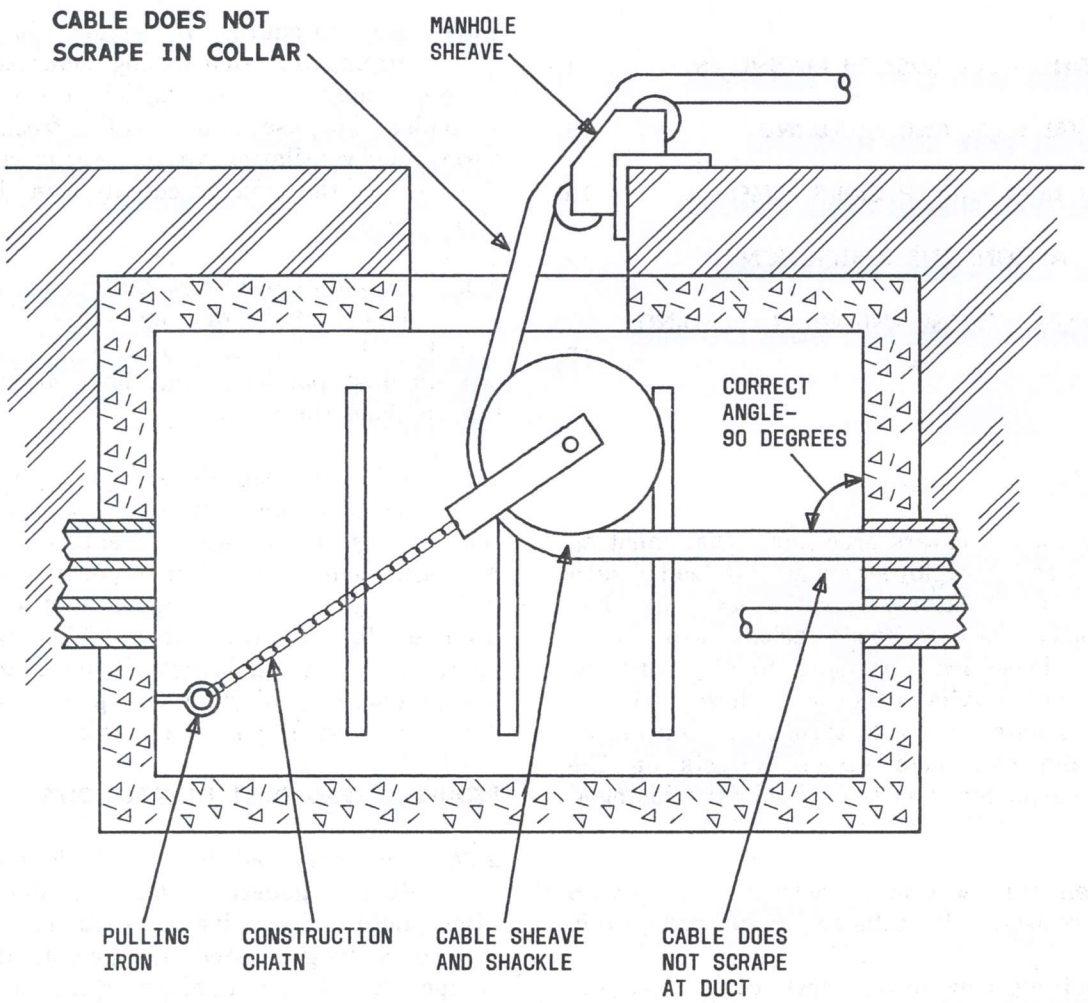

Fig. 1—Proper Equipment Alignment Using Cable Sheave and Shackle

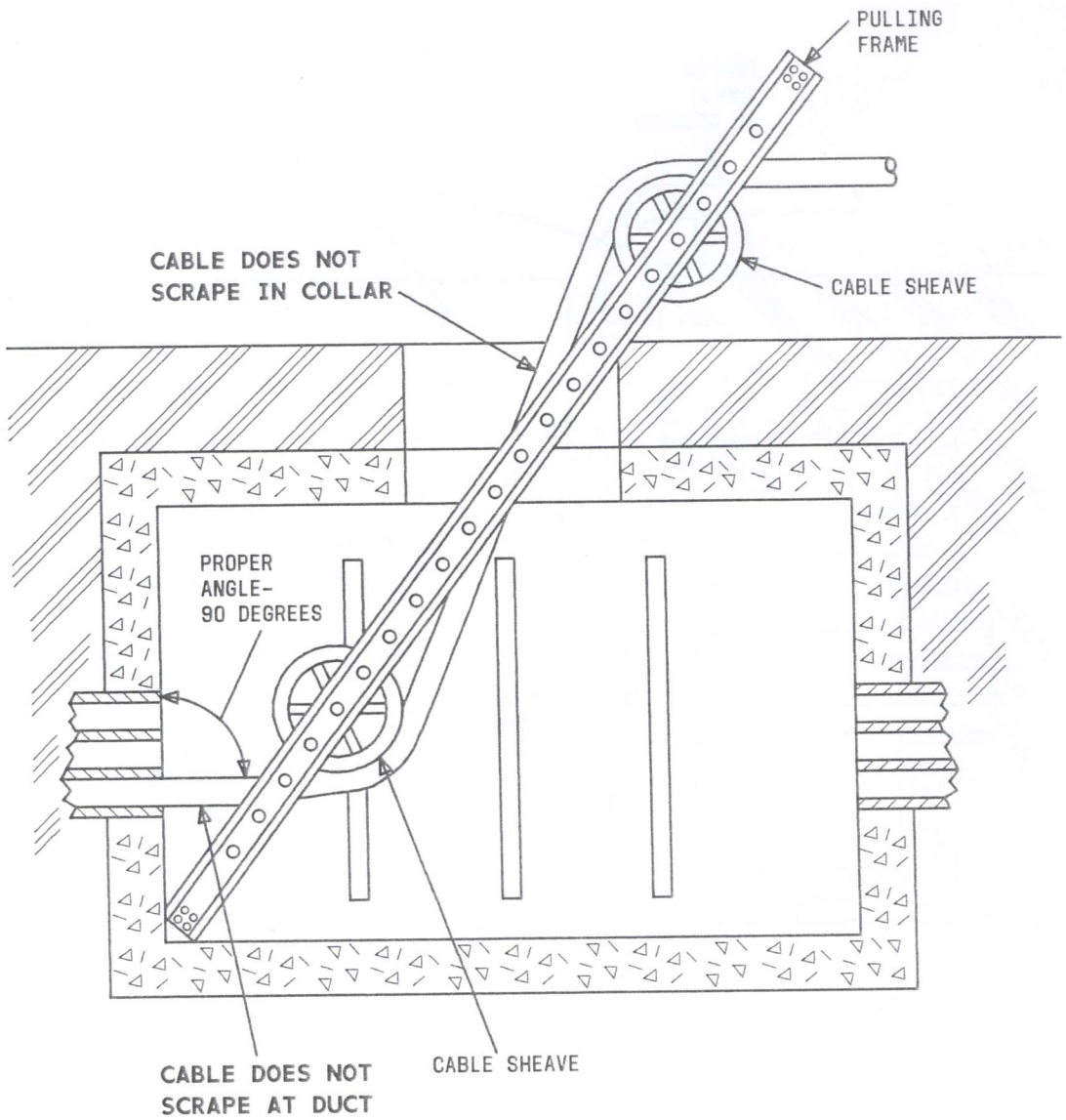

Fig. 2—Proper Equipment Alignment Using Pulling Frame

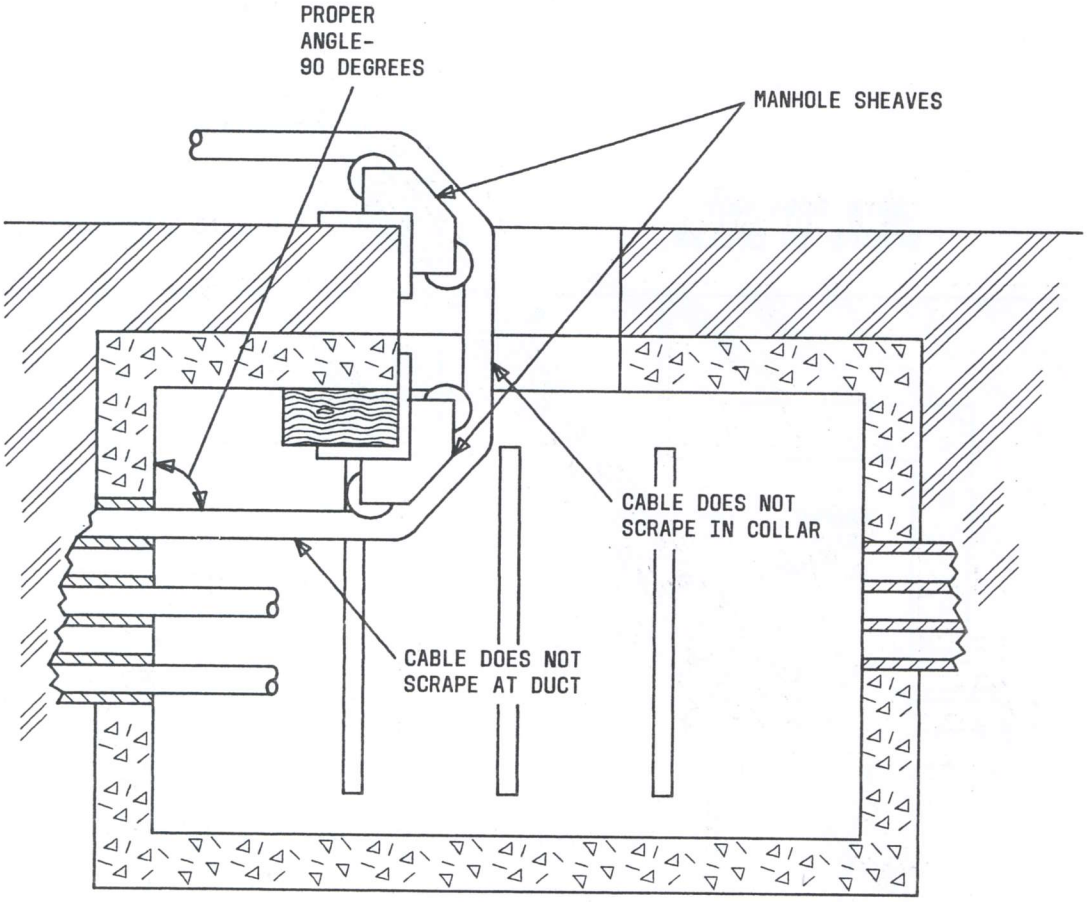

Fig. 3—Proper Equipment Alignment Using Manhole Sheaves

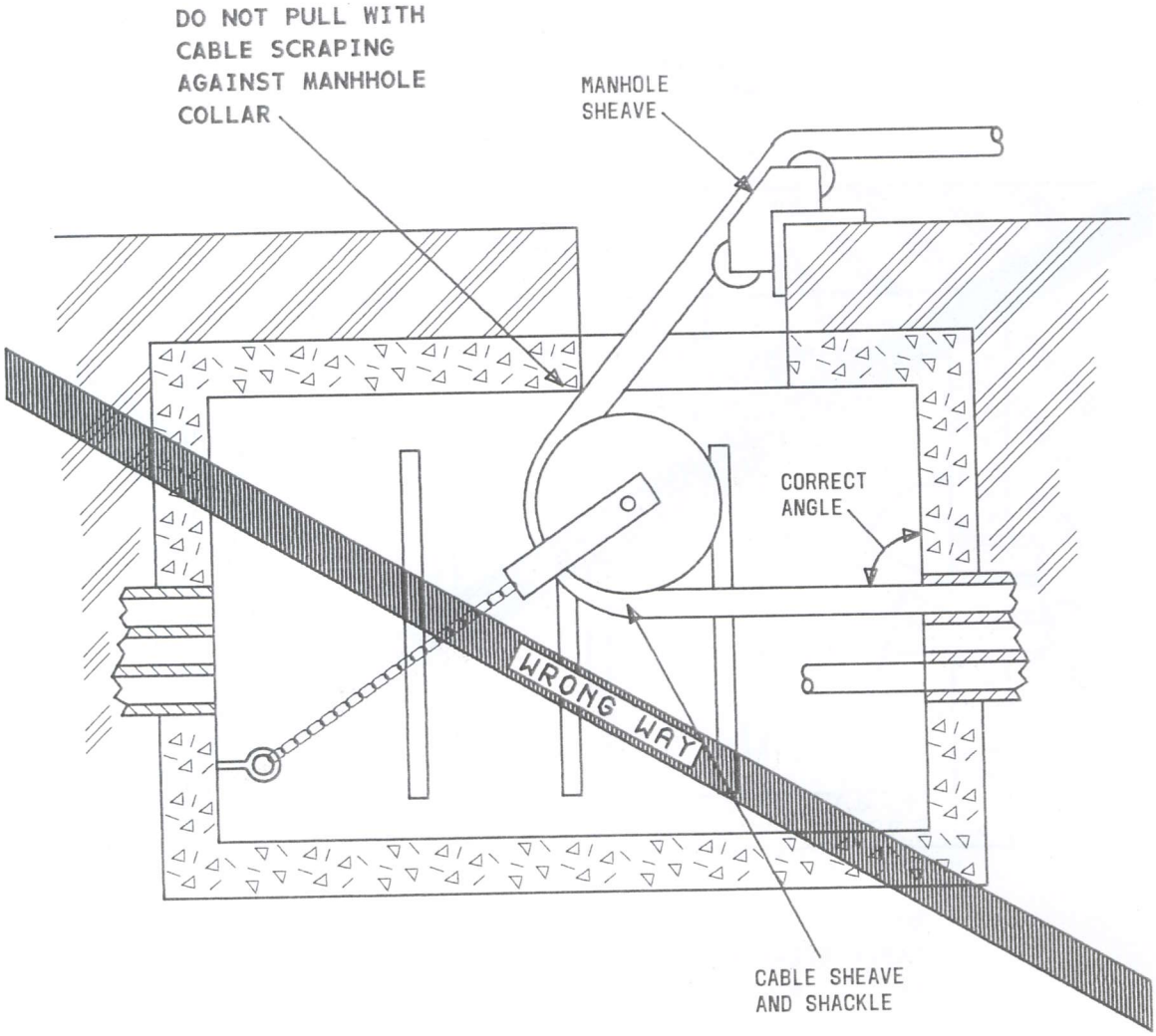

Fig. 4—Improper Equipment Alignment—Cable Scraping Collar

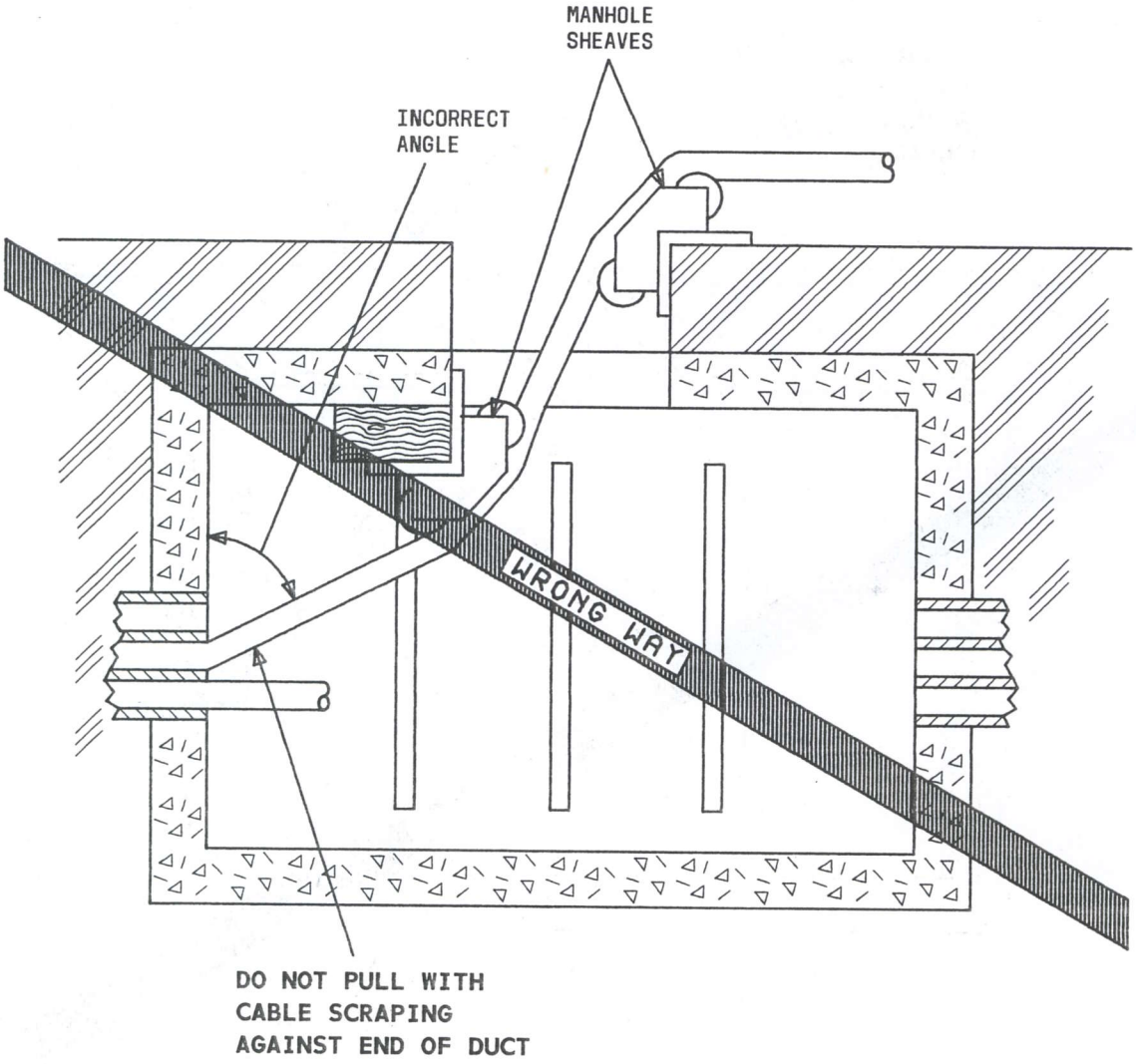

Fig. 5—Improper Equipment Alignment—Cable Scraping at Duct

2.06 During a pulling operation, wet cable sheath releases much less dust than dry sheath. A special wetting agent, P. Q. Wetting Agent, is available from American Oil Supply Company, Newark, N.J. 07105. It is a concentrated liquid in 1 pint containers. Each pint should be mixed with 5 gallons of water. When temperatures will be below freezing, substitute 1 gallon of ethylene glycol for one gallon of water. The wetting agent helps to bind lead particles to the sheath, thus reducing the amount of dust that becomes airborne. The wetting agent is nontoxic and will not leave a harmful or hazardous residue.

2.07 The wetting agent is applied with a B spray tank with tube assembly (AT-7850), shown in Fig. 6, and a special spray applicator, shown in Fig. 7. The spray tank is ordered as AT-7850, B Spray Tank with Tube Assembly, from Winton Products Company, Box 3332, Charlotte, N.C. 28205. The spray applicator is ordered as G-1383 Spray Attachment from General Machine Products Company, Inc., Trevose, Pa., 19407.

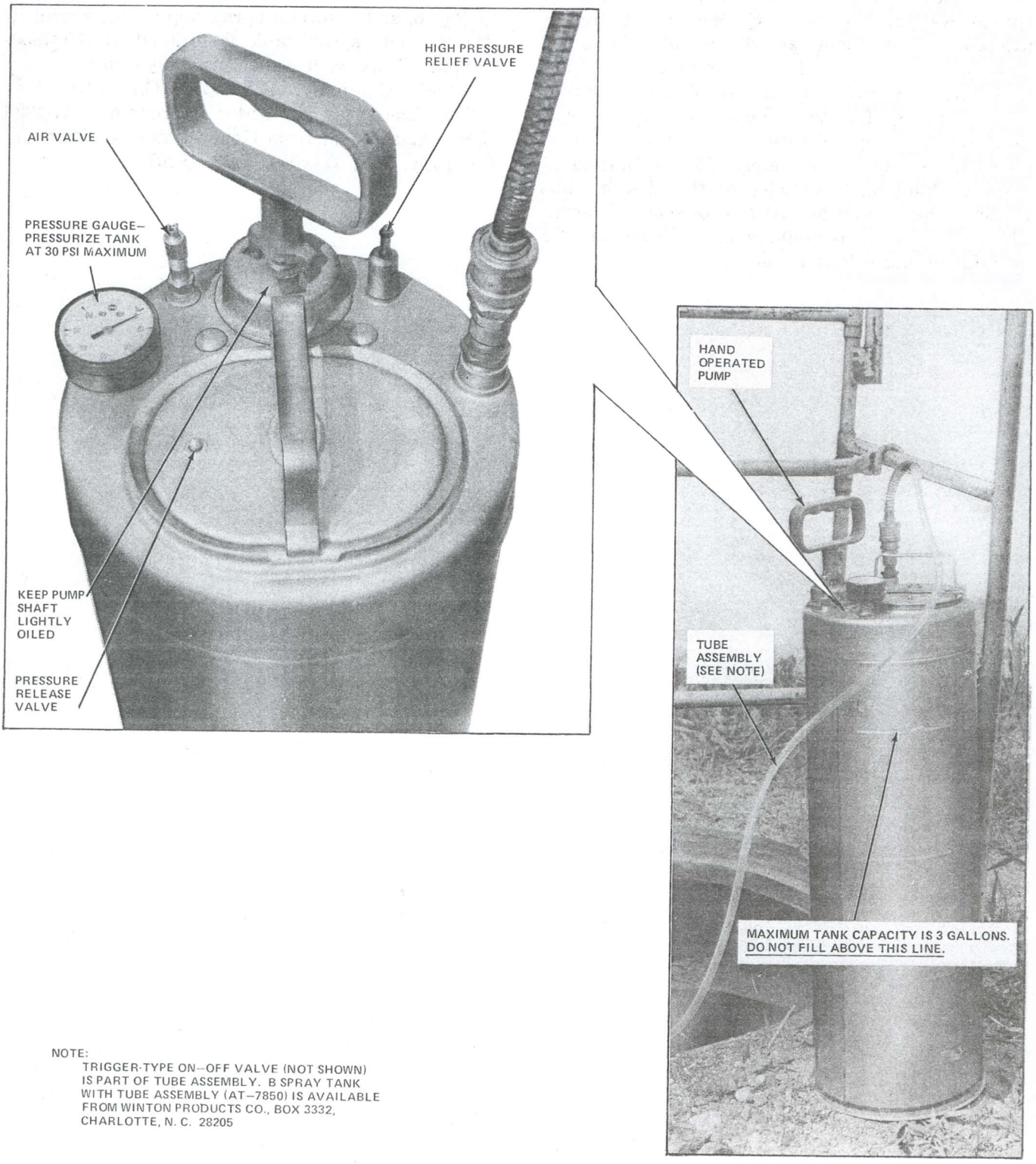

NOTE:
TRIGGER-TYPE ON–OFF VALVE (NOT SHOWN) IS PART OF TUBE ASSEMBLY. B SPRAY TANK WITH TUBE ASSEMBLY (AT–7850) IS AVAILABLE FROM WINTON PRODUCTS CO., BOX 3332, CHARLOTTE, N. C. 28205

Fig. 6—B Spray Tank

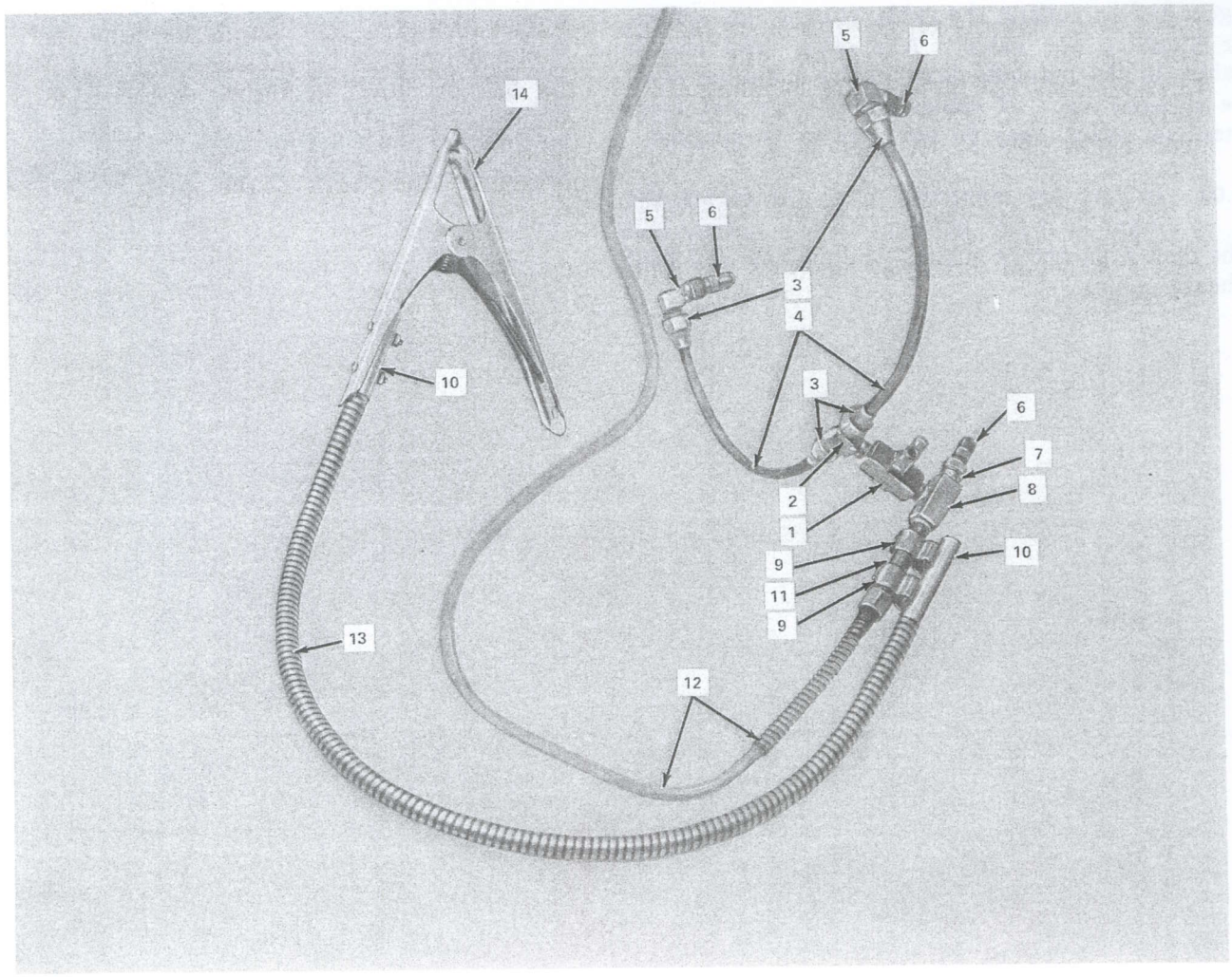

LEGEND:

1. FEMALE PIPE VALVE (WEATHERHEAD CAT. NO. 6805)
2. MALE BRANCH TEE (WEATHERHEAD CAT. NO. 45 X 6)
3. FLARE NUTS (4 REQ'D) (WEATHERHEAD CAT. NO. 1110 X 6)
4. 9 IN. LONG X 3/8 IN OD COPPER TUBE (2 REQ'D)
5. MALE ELBOW (2 REQ'D) (WEATHERHEAD CAT. NO. 49 X 6)
6. SPRAY NOZZLE 1/4 IN. NPT (3 REQ'D)
7. 1/4 IN NPT CLOSE NIPPLE
8. MALE BRANCH TEE (WEATHERHEAD CAT. NO. 3600 X 4)
9. LARGE FUSE HOLDERS (2 REQ'D)
10. FABRICATED END PIECE (2 REQ'D)
11. 1/4 IN. NPT NIPPLE, 3 IN. LONG
12. SPRAY TANK TUBE ASSEMBLY (FURNISHED WITH SPRAY TANK)
13. 30 IN. LONG TYPE D, 0.310 GALV. "SEALFLEX" TUBING (VERMONT FLEXIBLE TUBING CO., INC., LYNDONVILLE, VERMONT 05851)
14. CLAMP (STANLEY NO. 43-163P)

Fig. 7—Spray Applicator

2.08 All exposed portions of the cable being removed shall be sprayed with the wetting agent before cutting the cable, cutting out splices, or handling the cable. Any other lead sheath cables in the manhole that require handling shall be sprayed also. If cables are already wet from manhole water, they do not have to be sprayed.

2.09 In very dry manholes, spray the cables, the manhole walls adjacent to the cables, and the duct area before cutting or handling any lead sheath cables.

2.10 Before starting the pull, spray the sheaves, quadrant block, and other moving parts in contact with the cable. Set up the spray applicator at the duct face so the cable is sprayed as it leaves the duct as shown in Fig. 8. If the cable is not completely covered with the wetting agent as it is pulled from the manhole, stop the pull and make necessary adjustments to the spray applicator.

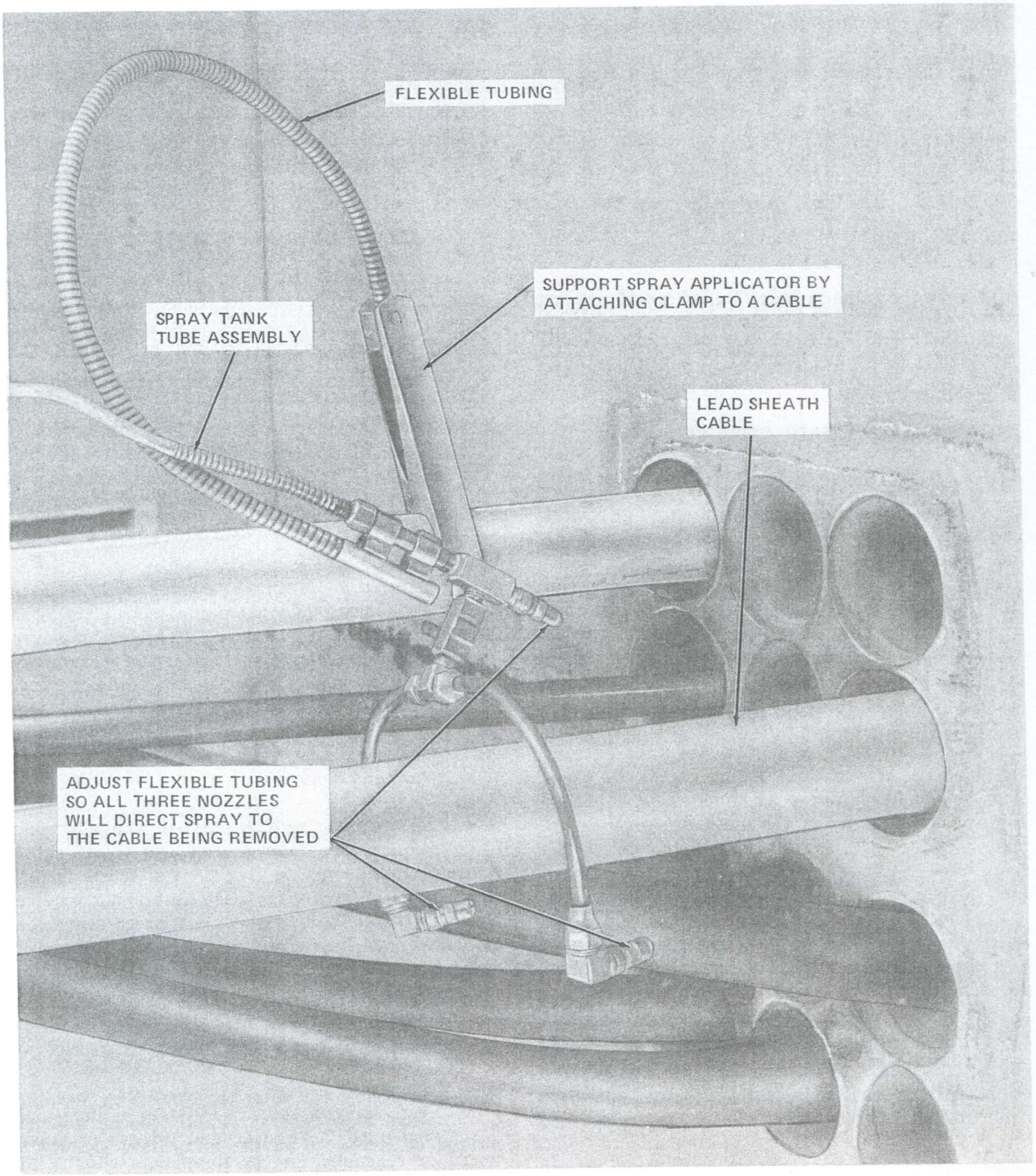

Fig. 8—Spray Applicator Setup

REMOVAL RATE AND HANDLING

2.11 The rate of removal influences the amount of dust released into the atmosphere. The pulling rate should be kept below 100 feet per minute and the cable should be wound directly onto a cable reel as it is removed. Where the equipment is available and its use is economically advantageous, the preferred method is to use the MCV cable removal unit described in Section 649-210-135. ***Do not manually cut*** the cable into short lengths for loading and transportation as this requires excessive cable handling.

2.12 As the cable is being pulled, avoid physical contact with the cable except when actually necessary. When not engaged in a work activity, stand clear of the cable—at least 5 feet away and, if possible, upwind.

3. AERIAL LEAD SHEATH CABLE REMOVAL

3.01 As with underground lead sheath cable, handling aerial lead sheath cable generates lead dust which is introduced into the atmosphere and presents the same potential adverse health effects. It is desirable, when removing aerial cable, to limit the amount of exposure to dust that is generated by eliminating as much of the cable handling as is possible consistent with the removal method. The method that causes the least exposure to employees is to lower the cable and strand intact to the ground and then take up the cable and strand with the MCV cable removal unit (Section 649-210-135). Where this method cannot be used, plan the job to eliminate as much cable handling as possible using any of the methods described in Section 627-380-240, Aerial Cable Removal.

3.02 When working aloft, the craft person should choose a work position upwind of the cable where possible. Avoid working in a position where it is necessary to reach up to the cable. Keeping the cable just above waist level is preferred.

3.03 When working on the ground, avoid positions that will be in the path of falling dust caused by activity aloft. When not actually engaged in a work activity, stand well clear of the work operation and upwind where possible.

3.04 Avoid physical contact with lead sheath except when actually necessary. Do not manually cut cable into short lengths for loading and transportation.

4. WORK ASSIGNMENT RESTRICTIONS

4.01 Work assignments associated with underground and aerial lead sheath cable removal are classified as high, medium, or low exposure assignments based upon the maximum potential exposure conditions over the normal work day. Work assignments during the work day shall be made in accordance with the exposure category/work period restrictions in the following paragraphs.

4.02 ***High Exposure/Half Day***—Work assignments that require the employee to work in the manhole cutting cable, removing splice cases, or setting up pulling hardware and attaching pulling devices shall be limited to one-half the work day. Work assignments that require the employee to work aloft removing terminals, cutting out splices, lowering cable and strand, placing cable blocks, or performing other tasks that require handling lead sheath cable shall be limited to one-half the work day. The employee shall then be reassigned to a low exposure work assignment for the remainder of the work day.

4.03 ***Medium Exposure/Full Day***—Work assignments related to aerial and underground lead sheath cable removal requiring the employee to operate cable removal equipment and periodically handle the cable, such as to ensure level wind, may be continued for the full work day. An employee on a medium exposure assignment ***may not*** be reassigned to a high exposure assignment during any one work day.

4.04 ***Low Exposure/Full Day***—Work assignments for aerial or underground lead sheath cable removal such as traffic flag person, truck driver, winch operator, and other tasks that do not require handling the cable, working aloft, or entering the manhole, may be carried out for the full work day. These work assignments may be filled by rotation with employees from high exposure assignments.

5. PERSONAL HYGIENE AND WORK CLOTHING

5.01 Lead dust can enter the system by ingestion from food, beverages, and tobacco products stored or consumed in the immediate vicinity of the work operation. These items should be stored on the truck in compartments that are not used for work glove or clothing storage. The following procedures must be observed:

- Cigarettes and other tobacco products shall not be stored or used in the immediate vicinity of the work operation. Employees shall smoke away from the work area and only after removing their work gloves and washing their hands waterless hand cleaner may be used.

- Water casks, vacuum bottles, etc, shall be stored on the truck. Employees shall drink away from work operations and only after work gloves have been removed.

- Employee's food containers shall be stored on the truck. Employees shall eat away from the work area and only after work gloves have been removed and the hands washed (waterless hand cleaner may be used).

- Never put hands, pencils, or any items that may be contaminated into the mouth.

- Avoid touching lips and nostrils with hands or other objects.

- Do not rub the face with gloves or sleeve of work clothing.

5.02 Standard safety headgear must be worn during cable removal operations. Persons with long hair are encouraged to tie their hair into 2 bun or use other means to cover as much of the hair as is possible with the headgear.

5.03 Work gloves offer some protection in preventing lead dust from contacting the hands and should be worn. However, the hands, should always be washed before handling anything that will be placed in the mouth.

5.04 Employees engaged in lead sheath cable removal are required to wear coveralls to prevent contamination of personal clothing. These employees will be provided with a clean pair of coveralls as required. The coveralls will be put on and removed at the work site. Upon removal, the coveralls shall be stored in an appropriate container.

5.05 Rubber boots, at least 12 inches high, will be provided for employees engaged in underground lead sheath cable removal operations. The overshoes shall be worn by employees when they are working in the manhole. After use, boots shall be washed with clean water before being stored on the truck.